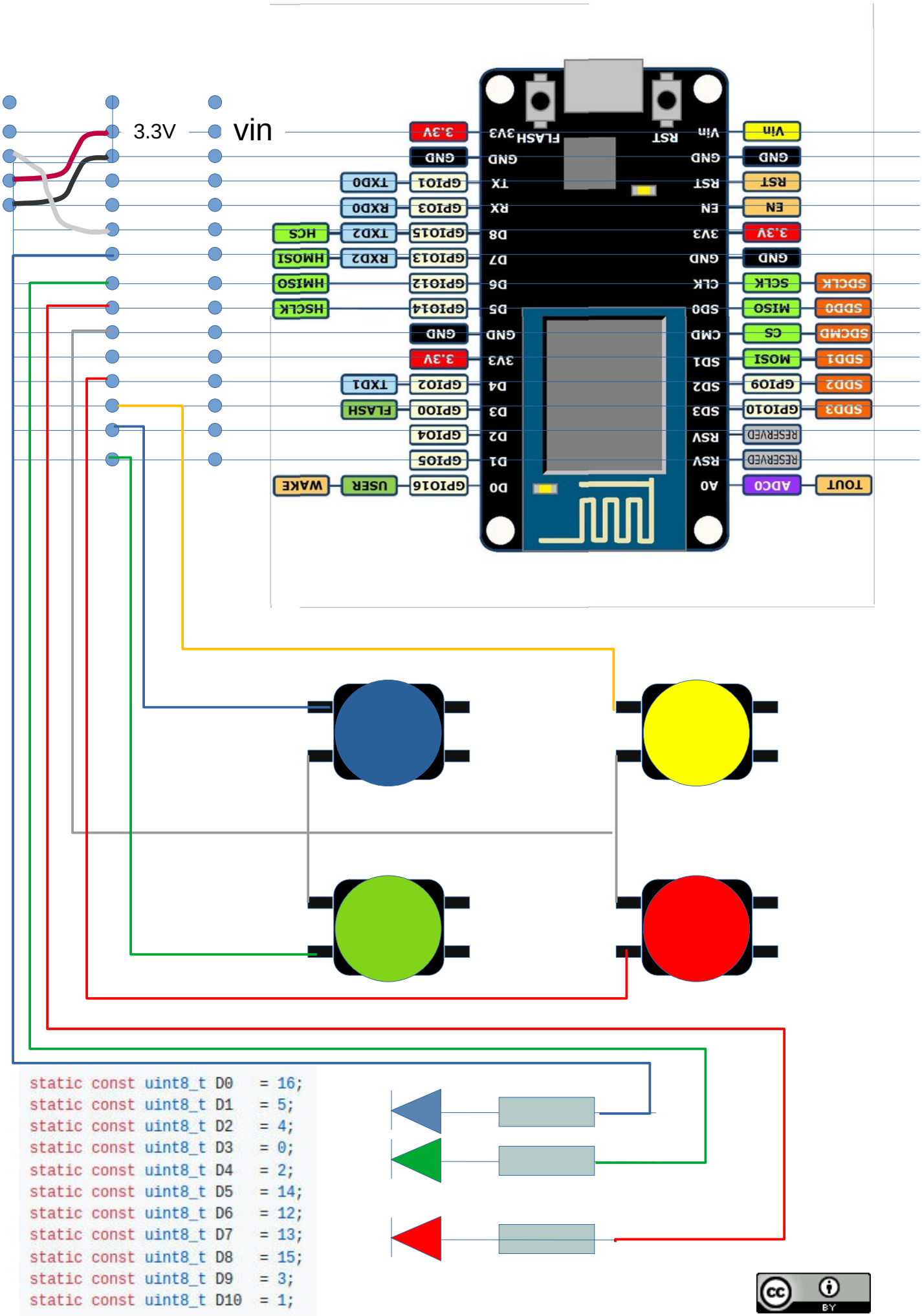

Montage initiation programmation © 2023 by Yves Dhenain is licensed under CC BY 4.0
http://libreedu.ovh/peda/telecommande.pdf